# Raychem NRG-TEMP TIMER THERMOSTAT

## DESCRIPTION

Digital timer thermostat for floor sensing or/and room sensing applications including min. and max. floor temperature limitation function.

## PRODUCT PROPERTIES

Automatic sensing of sensor mode (floor or room)
Manual ON/OFF by 2-pole main power switch
Big display with blue backlight
Built-in timer function
4 operation modes
- Standard mode (Comfort)
- 2 editable pre-programmes (EcoHome, EcoOffice)
- Summer mode (off-mode)

Daily editable in time blocks of 30 minutes
Adaptive function in order to reach desired temperature at desired time
Booster function for fast heat-up (+5°C for max 2 hours)
Read-out of actual floor sensor temperature
Monitoring of floor or room sensor. In the event of failure of an active sensor, the underfloor heating system is switched off.
Possibility to lock the settings e.g. public buildings

## OPERATION SENSOR MODE

Room sensing only
Floor sensing only
Room sensing with min./max. floor temperature limitation e.g. for wooden floors

## TECHNICAL DATA

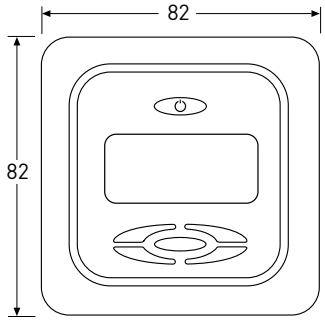


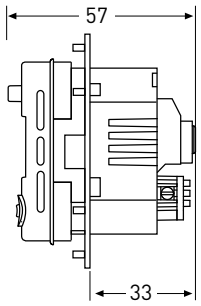


| | |
|---|---|
| Supply voltage | 230 VAC +10%, –15%, 50/60 Hz |
| Relay output | Heating cable 230 V, max 13 A |
| Temperature range floor sensor | +5°C to +35°C |
| Temperature range room sensor | +5°C to +40° |
| Limitation of range | Low +5°C/ high +35°C |
| Ambient temperature-operation | 0°C to +40°C |
| Ambient temperature-transport | –20°C to +50°C |
| Accuracy-floor/room sensor | +/– 0,5°C |
| Switching hysteresis | 0,5°C with floor sensor |
| Control modes | Floor or room sensing or room sensing with limiter |
| Clock function | 2 pre-programmes : EcoHome, EcoOffice; editable in blocks of 30 min; daily programmable |
| Back-up for set values | Non-volatile memory |
| Back-up for time and date | 24 hrs |
| Protection class | IP21 |
| Terminals | Max. 2,5 mm² |
| Floor sensor | NTC, 10K / 25°C with 3 m cable |
| Max length of floor sensor | 10w0 m, 2 x 1,5 mm² (230 VAC cable) |
| Diameter sensor cable | 4 mm |
| Diameter sensor tip | 6 mm, length 32 mm |
| Dimensions with frame | H 82 x W 82 x D 57 mm |
| Color | Polar white RAL 9010 |
| Approvals | Semko, VDE, EuBac |

## SYSTEM INFORMATION

Raychem underfloor heating thermostats are used with

- T2QuickNet mats 90 W/m² and 160 W/m²
- T2Red – Self-regulating heating cable
- T2Blue 10 W/m² and T2Blue 20 W/m² heating cables

## COMPATIBILITY WITH WALL BOXES

An extra square front plate for square frames is provided as a standard.

| Switch manufacturer | Light switch product range |
|---|---|
| Busch + Jäger | Reflex SI, Jussi |
| Eljo | Trend |
| Elko | RS, L571 |
| Gira | ST55 Standard, E2 |
| Jung | AS |
| Merten | M-Plan, M-Smart, M-Arc, Atelier, M-Antik, Thermo, M-STar |

## WIRING DIAGRAM

**Direct, connection – e.g. single heating circuit**

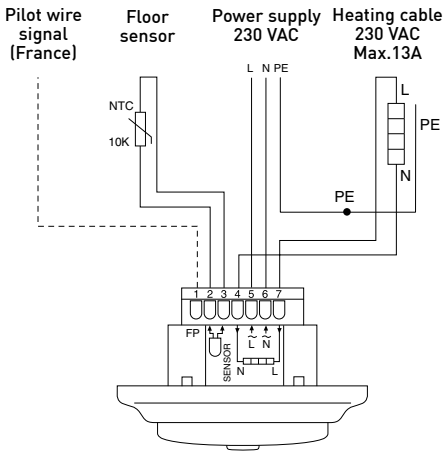


**Connection via contactor – e.g. 3 heating circuits**

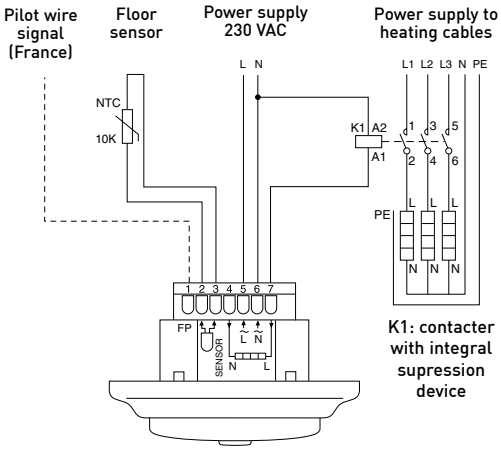


Do not use contactor without interference filter.

## ORDERING INFORMATION

| | |
|---|---|
| R-TC-NRG | 1244-002513 |

## ACCESSORIES

| | |
|---|---|
| Silver-R-TC silver coloured front parts | 1244-010130 |
| Sensor-N10K spare floor sensor | 1244-002952 |
| Silver Raychem TC-NRG-Squared | 1244-010132 |
| Adapter UK wall box | 1244-010134 |

WWW.THERMAL.PENTAIR.COM

**UNITED KINGDOM**
Tel: 0800 969 013
Fax: 0800 968 624
salesthermaluk@pentair.com

**IRELAND**
Tel: 1800 654 241
Fax: 1800 654 240
salesie@pentair.com

All Pentair trademarks and logos are owned by Pentair. All other brand or product names are trademarks or registered marks of their respective owners. Because we are continuously improving our products and services, Pentair reserves the right to change specifications without prior notice. Pentair is an equal opportunity employer.

© 2013 Pentair. All Rights Reserved.